MINISTÈRE DE L'ÉDUCATION NATIONALE, DE L'ENSEIGNEMENT SUPÉRIEUR ET DE LA RECHERCHE

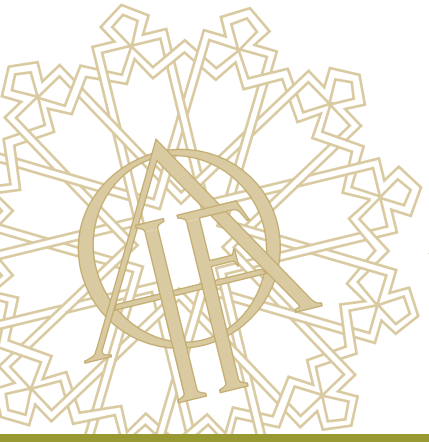

ANNALES ISLAMOLOGIQUES

en ligne en ligne en ligne en ligne en ligne en ligne en ligne en ligne en ligne en ligne

AnIsl 24 (1989), p. 207-232

Giuseppe Fanfoni

# An Underlying Geometrical Design of the Mawlawī Samāʿ-Ḫāna in Cairo [avec 3 planches].

*Conditions d'utilisation*

L'utilisation du contenu de ce site est limitée à un usage personnel et non commercial. Toute autre utilisation du site et de son contenu est soumise à une autorisation préalable de l'éditeur (contact AT ifao.egnet.net). Le copyright est conservé par l'éditeur (Ifao).

*Conditions of Use*

You may use content in this website only for your personal, noncommercial use. Any further use of this website and its content is forbidden, unless you have obtained prior permission from the publisher (contact AT ifao.egnet.net). The copyright is retained by the publisher (Ifao).

**Dernières publications**

| | | |
|---|---|---|
| 9782724711660 | *Mélanges de l'Institut dominicain d'études orientales 41* | Adrien Candiard (éd.) |
| 9782724711745 | *Bulletin archéologique des Écoles françaises à l'étranger (BAEFE)* | |
| 9782724711271 | *Du côté de chez Zeus* | Emmanuel Botte (éd.), Hélène Cuvigny (éd.), Michel Reddé (éd.) |
| 9782724711677 | *La Description de l'Égypte* | Paul-Marie Grinevald |
| 9782724711714 | *La pensée et la pratique pharmacologiques d'Avicenne* | Sylvie Ayari |
| 9782724711899 | *BCAI 40* | |
| 9782724711288 | *Karnak-Nord XI* | Colin Hope |
| 9782724711622 | *BIFAO 126* | |

© Institut français d'archéologie orientale - Le Caire

# AN UNDERLYING GEOMETRICAL DESIGN OF THE *MAWLAWĪ SAMĀʿ-ḤĀNA* IN CAIRO*

Giuseppe FANFONI

The Cairo *Samāʿ-Ḥāna* is situated, as the essential reference point, among both cultual and monastic edifices, which together constitute the united architectural complex [1] of Mawlawī Derwishes [2]. Its sacredness is accentuated by its concealed position with respect to the street, it being closed off from view by the curtain consisting of the

*. A summary description of the plans and drawing related to the present article was presented at the VIII Congress of Turkish Art held in Cairo between September 26 and October 1 of 1988.

1. The architectural complex of the Mawlawī Derwishes is located at the foot of the Citadel, in the area known as Ḥilmiyāh Qadīma at the beginning of Šāriʿ al-Suyufiyya. The present configuration of buildings, which is datable to the 19th cent., is the result of a series of constructional additions and restorations made by the Mawlawī Derwishes in the area occupied by them, presumably from the time of the Ottoman conquest. The entire complex, in which excavation and restoration has been carried out since 1978-1979, was made available in 1984 for a programme of professional training in restoration and archaeology supported by the « Scuola Orientale » of Rome University; it is now the official seat of the Italian-Egyptian Centre for Professional Training in the Field of Restoration and Archaeology as the result of an agrement between the E.A.O. and the « Direzione generale per la cooperazione allo sviluppo » of the Italian Ministry of Foreign Affairs.

2. Among the many sources dealing with this Derwish order and Ğalāl al-Dīn Rūmī (d. 1273 in Konia), the great mystic poet and namesake of the Mawlawī order, see especially : J.P. Brown, *The Derwishes,* Oxford 1927; R.A. Nicholson *Selected Poems from the Dīvāni Shamsi Tabrīz,* Cambridge 1898 (2nd ed. 1952); H. Ritter, *Neue Literatur über Maulānā Galāluddīn Rūmī und seinen Order,* « Oriens », XII-XIV (1961) p. 342-354 and *Die Mevlānafeier in Konya von 11-17 Dezember 1960,* « Oriens », XV (1962), pp. 249-270; M. Molé, « La danse extatique en Islam », in *Les Danses sacrées* (Sources orientales), Paris 1963, pp. 229-273; A. Bausani - H. Ritter : see under « Djalāl al-Dīn Rūmī » in *Encyclopédie de l'Islam,* Leiden-Paris 1967; AA. VV., *Nel Centenario del Poeta Mistico Persiano Galāl ad-Dīn Rūmī* (Accademia nazionale dei Lincei), Roma 1974; I. Friedlander, *The Whirling Derwishes,* London 1975; Aflaki, *Les Saints des derviches tourneurs* (trad. C. Huart), Paris 1978; A. Bausani, *Rūmī, Poesie mistiche,* Milano 1980.

AnIsl 24 (1989), p. 207-232 Giuseppe Fanfoni
An Underlying Geometrical Design of the Mawlawī Samāʿ-Ḥāna in Cairo [avec 3 planches].
© IFAO 2026 AnIsl en ligne https://www.ifao.egnet.net

*Ṣunqur Saʿdī* architectural remains and some other edifices built successively to complete the *Takiyya* ensemble [3].

The architectural aspects are designedly simple, lending an air of balanced tastefulness which pervades in the interior as well, where the Ottoman Baroque decor appears extremely elegant (Pl. I,IV). The interior space and the exterior volumetry produce a sensation of measured harmony, in spite however, of certain irregularities occasioned by the reutilization of previous structures, as well as constructional imprecisions bound to the use of poor materials and techniques, which have made numerous later restorations necessary.

The *Samāʿ-Ḫāna* typology [4] does not have a documented historical origin, and it had a slow evolution up till around the XVI-XVII centuries, in the period during which Sufism, and the Mawlawī order, in particular, had its maximum vitality.

The essential architectonic elements of the *Samāʿ-Ḫāna* were the dome and the underlying stage area devoted to the *Samāʿ* ceremony; consequently, the space tends to a layout definition as a central plan. It is, nevertheless, also bound, from the

3. For a detailed description of the architectural complex, which has to some extent re-used the earlier structures of the *Madrasa of Ṣunqur Saʿdi* (14th cent.) and the Yašbak Palace (14th-15th cent.) see : G. Fanfoni, « Il complesso architettonico dei dervisci Mevlevi in Cairo », in *Rivista degli studi orientali,* LVII (1983), pp. 77-92.

Previous articles concerning the works in progress of this architectural complex are : G. Fanfoni - C. Burri, « Notes on the Restoration of the Small Theatre of the Dancing Dervishes at Share Helmeia in Cairo », in *A.A.R.P.*, XV (1979), pp. 9-15; G. Fanfoni - C. Burri, « The Mawlawiyya and the Madrasa of Sunqur Saʿdi with the Mausoleum of Hasan Sadaqa », in *A.A.R.P.*, XVI (1980), pp. 62-65; G. Fanfoni, « Restauri del complesso architettonico dei Dervisci Mewlewi al Cairo », in *Architettura nei Paesi Islamici,* IIª Mostra Internazionale di Architettura, Biennale di Venezia, 1982.

4. The theatrical aspects of the *Samāʿ* and the fact that it could be performed on occasion outdoors and thus in a setting constructed specially for the purpose, suggest a possible origin in the setting constructed for the « *ta'ziye* » religious dramas : A. Piemontese, « La rappresentazione delle ta'ziye durante il regno di Nāser ad-Din Šāh... » in *Ann. Ist. Orient. Univ. Napoli.*, XIII (1963), pp. 330-339.

For similar connections with the « zurkhané », in which there was sporting activity in front of spectators see : A. Piemontese, « L'Organizzazione della ' zurxāne ' e la ' futuwwa ' in *Ann. Ist. Orient. Univ. Napoli,* XIV (1964), pp. 453-473. Moreover, the presence of the miḥrāb and minbar besides indicating that the *Samāʿ-Ḫāna* was sometimes also used as a mosque, suggest that the *Samāʿ* might also have been performed in the mosque and the layout itself of the *Samāʿ-Ḫāna* was imposed on that of the mosque; subsequent modification occasioned by the rite would then have been made to his layout.

AnIsl 24 (1989), p. 207-232 Giuseppe Fanfoni
An Underlying Geometrical Design of the Mawlawī Samāʿ-Ḫāna in Cairo [avec 3 planches].
© IFAO 2026 AnIsl en ligne https://www.ifao.egnet.net

functional point of view, beyond the *Samāʿ* rite for which the presence of spectators was foreseen, to the veneration of one or more tombs of mystics, formerly associated with the *Takiyya* or not [5].

These two ideological references are in this way at the basis of the development of the *Samāʿ-Ḫāna* architecture. From the earliest time, these two aspects can be said to have been interdependent, from the moment of the mystic exaltation of Ğalāl al-Dīn Rūmī, who performed the *Samāʿ* rite at the death of Shamsi Tabrīz [6]. Over time, while the veneration of the deceased remained as a component of the *Samāʿ* rite, it came to acquire very early, and more and more, a particular cosmic symbology. Some initiates through the particular rite drew on the complex *gnosis* of cosmic power and, through the symbolic performance, they allowed to the spectators admitted to the ceremony the reception of the cosmic harmony and the unitary sense of the laws which regulate the multiple aspects of it. From this came the name — *Samāʿ-Ḫāna* — « the hall of listening », bestowed on the space in which the ceremony was held. The ceremonial performance engaged a circular area symbolically surmounted by the dome, and around it were variously arranged the other functional spaces, such as the spectator area, the orchestra, the places for the reciters of the Quran and the *Maṭnawī* verses, and, finally, the Mausoleum [7]. The *Samāʿ* ceremony can be generally characterized by two phases preceded and followed by prayers and recitations : the first phase is the *dawr-i-Waladī* comprising three counterclockwise rounds and one second phase called the *Salām,* which consists of three or four tours, always counterclockwise run along two different orbits. The Derwishes at the same time were whirling on their own axes, keeping the palm of the right hand turned up to the dome centre, and the palm of the left hand turned down [8]. In this way they received the power for their movement

5. The many graphic representations which enable us to document historically the *Samāʿ-Ḫāna* clearly reveal the spatial connection between the cupola and the area below it where the dance was performed, see : Şehabettin Uzluk, *Mevlevi-likte resim-resimde mevlevilev,* Ănkara (Türkie İş Bankasi Kültür yayinlari 1/5), 1957.

However, the spatial connection between the area of the *Samāʿ* and that of the Mausoleum, as at Konia, in some cases is not evident since the Mausoleum is near the *Samāʿ-Ḫāna* but spatially distinct from it, as for example at Galata.

6. Cf. M. Molé, *op. cit.*; p. 232.

7. For a description of the ceremony of the *Samāʿ* and the area it tends to define schematically cf. : H. Ritter, « Der Reigen der tanzenden Derwische », in *Zeitschrift für vergleichende Musikwissenschaft I,* 1933, pp. 28-40. Also see : M. Molé, *op. cit.,* pp. 229-273.

For visual evidence of the *Samāʿ* ceremony of Cairo, cf. H. De Vaujany, *Le Caire et ses environs,* Paris 1883, pp. 317-319.

8. As for the forms of the rite see : H. Ritter, *Die Mevlānafeier in Konia, op. cit.,* pp. 249-270; M. Molé, *op. cit.,* pp. 229-232.

AnIsl 24 (1989), p. 207-232 Giuseppe Fanfoni
An Underlying Geometrical Design of the Mawlawī Samāʿ-Ḫāna in Cairo [avec 3 planches].
© IFAO 2026 AnIsl en ligne https://www.ifao.egnet.net

along the vertical axis of the *Samāʿ-Ḫāna,* as the stars in the Neoplatonic conception and, in turn, in the Sūfī philosophical elaborations.

This general *Samāʿ* scheme, called *Muqābala,* was in some ways taken over by the practise of the other Derwish orders. Nevertheless, for the Mawlawis it constitutes, according to the order's literature, the fundamental rite of the life of the confraternity since the XIVth century [9]. Especially after that period the symbolic meanings of the rite were more and more elaborated and determined through the life and works of Ğalāl al-Dīn Rūmī, careful meditation, and interaction with Islamic philosophy and the early culture of Islam.

The first interpretations were centered on the themes of death and the awakening to universal judgement, by the sound of the heavenly spheres [10]. So the music refers to the call to paradise, and the *Samāʿ,* as already for Rūmī at the death of Shamsi Tabrīz, it may be related to the *ṭawāf,* or sevenfold circumambulation of the Kaʿba, or the circumambulation of the tomb of a saint. The successive interpretations insist, more properly on the Sūfī cosmological conceptions for which the *dawr-i-Waladī* represents the supreme heavenly movement which encloses the whole, while the four rounds of the *Salām* represent, respectively, the starry heaven or the angelic world soul (*malakūt*); secondly, that of the Sun or of the spirit of the power world; thirdly, that of the moon or of the secret of the divine world; and, finally, the last tour represents the world of the composed elements, and so the man who with the *Samāʿ* annihilates his illusory existence and, awakening to the music, enters gradually into cosmic harmony. The more abstruse elucidations of the *Samāʿ* meanings come from Dīvāne Mehmed Chelebi (XVI cent.) and from Mehmed Chelebi of Ismaīl Rüsūhī Ankaravī (1632 - XVII cent.), *Šayḫ* of the Galata *Takiyya.* In their explanations they insist particularly on the symbolic meaning of the geometrical circle shape : the place of all existing things, which constitutes the mirror of the Unity from which they are emanated, as the circle and the center to which it refers [11].

According to Ṣūfī philosophy the symbolic value of the numbers and their geometrical and figurative representations constitute the interpretative key to the cosmic structure through symbols and archetypes. The Islamic cosmological doctrines concerning every branch of knowledge, in the unitary view, find, as is well known, reference to Pythagorean

9. Cf. M. Molé, *op. cit.,* p. 237.
10. Cf. M. Molé, *op. cit.,* pp. 239-244.
11. Cf. M. Molé, *op. cit.,* pp. 249-265.

AnIsl 24 (1989), p. 207-232 Giuseppe Fanfoni
An Underlying Geometrical Design of the Mawlawī Samāʿ-Ḫāna in Cairo [avec 3 planches].
© IFAO 2026 AnIsl en ligne https://www.ifao.egnet.net

and Platonic Greek esotericism, enriched by the cultures of oriental countries with which Islām came into contact during its expansion [12].

Starting from the XVI century a synthesis of these cultural aspects are at the basis of the symbolic speculation of the rite. In fact, during this period of particular diffusion of Sufism, many cultural and political celebrities were associated with the Mawlawī order, which assumed more and more the aspect of an influential elite. Particularly, since the XVIIth century, the Mawlawī order was entrusted with the investiture of the new Sultan, and in the train of the Ottoman expansion, numerous Mawlawī centers emerged throughout the Islamic world [13]. To that period the Cairo center also refers. As a matter of fact, the first ministerial act concerning the donations received by the Mawlawiyya in Cairo goes back to 1607 [14].

The first settlement of the *Takiyya,* on the basis of the archeological investigations undertaken, must have had a rather provisional character, reutilizing the edifices which they found on the site, and only after some time and over the different phases they built up the whole architectural complex which has come down to us today. Also, the space devoted to the *Samāʿ* must have had originally a provisional character, while the latest phases of constructive activity around the present *Samāʿ-Ḫāna* can be referred to the first half of the 1800's [15]. It seems to have been one of the last of such edifices to

12. For a general treatment of these aspects see : Seyyed Hossein Nasr, *An introduction to Islamic Cosmological Doctrines,* London 1978.

13. Cf. H. Ritter, *Neue Literature, op. cit.,* pp. 345-347.

14. A copy of this act of donation relating to Prince Yūsuf Sennen was kindly provided by Medhat el Manabawi. It is dated to the 17 Safar 1016 A.H. / 1607 A.D. (archives of the Ministry of Waqf n° 3301). The text gives the precise boundaries of the *Takiyya* and other donations of land that were to generate the income necessary to pay the employees of the convent; the text specifies the number of these together with the job which they performed. It is clear from the text that the Mawlawī had for some time occupied an area bordering that which was donated to them. Even though Turkish documents relating to the order speak of journeys to and residence in Cairo on the part of the Mawlawī in earlier times, it is likely that they did not organize themselves there until after the Ottoman conquest. For a detailed description of these donations see my article (in the press) *Historical and Architectural aspects of the Cairo Mawlawiya.*

15. The dates found in the *Samāʿ-Ḫāna* are 1274 A.H. / 1851 A.D. in the central part of the cupola and 1284 A.H. / 1865 A.D. in the painted decoration signed by the artist Tabrīz Kasem in the medallions under the drum of the cupola. Around the same period are the dates 1225/1808, given by ʿAbd el-Raḥman Fahmy, *Maǧallat al-Maǧmaʿ al-ʿIlmī al-Miṣrī* (vol. 52), Cairo 1970-71, p. 45, n. 2, and a later one concerning the building and repairs, ordered by Said Pasha

AnIsl 24 (1989), p. 207-232 Giuseppe Fanfoni
An Underlying Geometrical Design of the Mawlawī Samāʿ-Ḫāna in Cairo [avec 3 planches].
© IFAO 2026 AnIsl en ligne https://www.ifao.egnet.net

be built in the Islamic world, and was probably one of the last to remain in active existence after the decree to close the Turkish darwisheries by Ataturk in 1925 [16].

The slow typological evolution of the *Samāʿ-Ḫāna* architecture does not reflect synchronistically on the literary evolution of the *Samāʿ* meaning, a fact which perhaps had to do with the generally poor architecture which they produced, in conformity with the « poverty of spirit » to which the Derwish order was devoted. For that reason, the functional and expressive coherence of the late *Samāʿ-Ḫāna* in Cairo represents, in the final history of the order, the last and most impressive manifestation of the Mawlawī ideology [17].

In the Cairo *Samāʿ-Ḫāna,* the area devoted to the *Samāʿ*, as in other rare exemples dating from the last Mawlawī period, is circular. The circle, according to the cosmological doctrines of the Islamic philosophers, but particularly that of Ismaīl Ankarawī and Dīvāne Mehmed, is the expressive synthesis of the cosmos [18]. The center symbolizes the transcendent absolute Unity of which it is impossible to have the analytic elements for its description; and circumference symbolizes the *locus* of the existing things, or the undifferentiated path without initial or final point, being emanated by the center *via radius*. The symbology has a geometrical correspondence between the circonference

(between 1854 and 1863), given by ʿAli Mubārak, *Al-Ḫiṭaṭ al-Tawfīqiyya al-Ǧadīda* (II), Bulāq 1305/1888, p. 45.

Generally speaking it seems reasonable to suppose that from 1607 to the first half of the 18th cent. there were earlier phases which include the planimetric arrangement of the area and the first attempt to systematise the monastic buildings.

16. Though ʿAbd el-Raḥman Fahmy (*op. cit.*, p. 45) gives 1334/1916 as the date when the convent was officially closed, it seems nevertheless to have continued to function for some time longer, perhaps until the time when the Turkish ones were officially closed down by Ataturk in 1925. In fact the date 1341/1922 which is attached to the inscription « *Yā ḥaḍrat Mawlānā* » indicates a moment of particular vitality in the life of the order. An article written by Mai Ziyada in the newspaper Al-Ahrām (13 June 1928) and a recording of their music at the Congress of Arabic music held in Cairo in 1932 both testify to the presence of Mawlawī in their complex. Finally, the date 1945 over the entrance to the convent referring to its re-use as a guest house in the care of the Ǧamʿiyya Ḫayriyya indicates the final closure of the *Takiyya*.

17. The reconstruction of the architecture evolution of the *Samāʿ-Ḫāna* has been made difficult, among other reasons, by the fact that there are very few surviving examples of this type of building, despite the fact that Dīvāne Mehmet cites 86 tekkeyya for his period and the order grew considerably in later centuries (cf. Ritter, *Neue literature, op. cit.*, p. 348).

18. For a specific analytical study of geometrical Islamic designs and their metaphysical/cosmological implications see : Keith Critchlow, *Islamic Patterns,* London 1976.

AnIsl 24 (1989), p. 207-232 Giuseppe Fanfoni
An Underlying Geometrical Design of the Mawlawī Samāʿ-Ḫāna in Cairo [avec 3 planches].
© IFAO 2026 AnIsl en ligne https://www.ifao.egnet.net

and the center, a point, or, better, the entity of which it is impossible to give the dimensions, and which becomes manifest in its begetting of the circumference, which is, in its turn, a line, or, better, a sequence of points, images of the center (fig. 1).

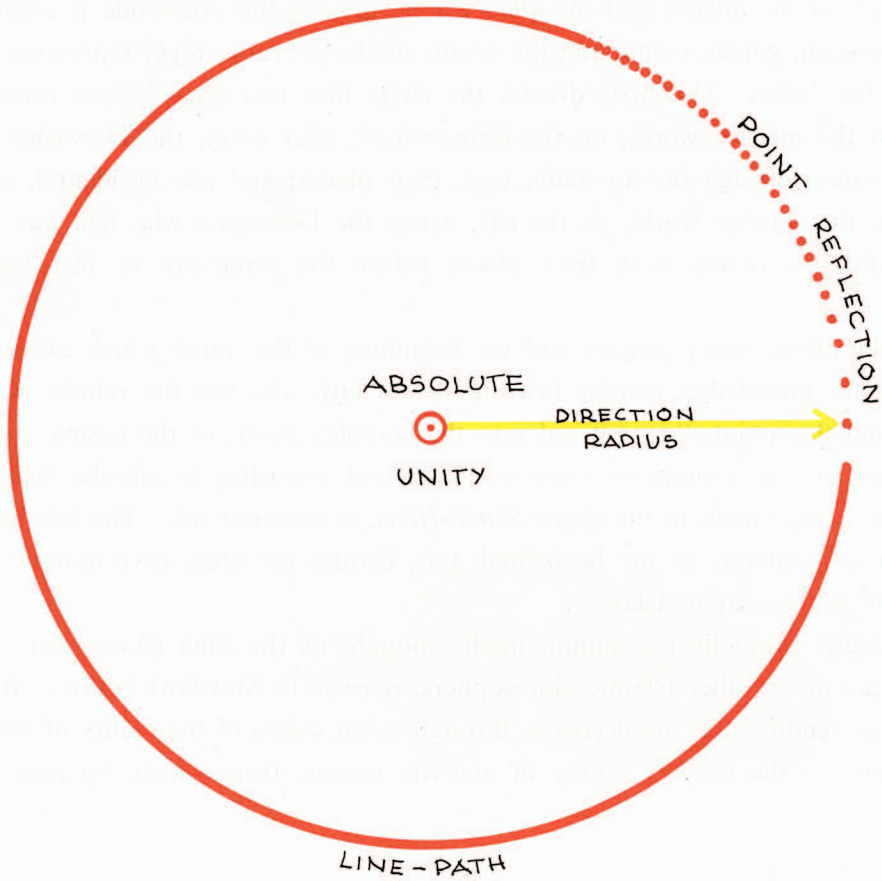


Fig. 1.

The circular area of the *Samā'-Ḥāna* in Cairo is well delimited by a wooden balustrade, on one side of which, is the entrance for the Derwishes; and, on the opposite, the *pöst,* identified by an over-hanging plaque, or inscribed *lawh : Yā ḥaḍrat Mawlānā* (O Blessed Lord!) alluding to Mawlānā Ğalāl al-Dīn Rūmī, founder of the order, to demonstrate that the authority of the latter is invested in his living representative, the current *šayḫ*.

AnIsl 24 (1989), p. 207-232 Giuseppe Fanfoni
An Underlying Geometrical Design of the Mawlawī Samā'-Ḥāna in Cairo [avec 3 planches].
© IFAO 2026 AnIsl en ligne https://www.ifao.egnet.net

The Derwishes, on passing the balustrade gate, found themselves along the line which corresponds to the diameter of the circle, with the absolute Unity in the center, directly opposite the seat of the *šayḫ*, the Perfected Being (*al-Insān al-Kāmil*), their spiritual guide.

The line which joins these two points is the horizontal mystical equator, one of the two fundamental axes of the interior *Samāʿ-Ḫāna* space [19]. It continues, significantly, on one side of the *miḥrāb* and the *qibla* Kaʿba, and on the other side it continues into the Mausoleum, which, containing the tombs of the previous *šayḫ*, represents the continuity of the order. That axis divides the circle into two areas [20], one oriental, or of being and the interior world, on the right, where, after entry, the Derwishes who had already gotten through the novitiate, took their places; and one occidental, or of non-being and the exterior world, on the left, where the Derwishes who had not yet gotten through their novitiate, took their places before the ceremony in silent expectation (fig. 2).

After the introductory prayers and the beginning of the music which excited in them the desire for knowledge, coming in front of the *šayḫ* who was the vehicle of initiation, and passing this point, they entered into the complex *gnosis* of the cosmic powers, and they began to turn around on their own axis and according to circular orbits around the central area, which, in the Cairo *Samāʿ-Ḫāna*, is coloured red. The two hemispheres on which the equator, or the horizontal axis, divides the area, correspond to the arcs of descent and ascent in Islām [21].

The esoteric symbolism, common in the thought of Ibn Sīnā (Avicenna), the Iḫwān al-Ṣāfā, and many other Islamic philosophers, is basic to Mawlawī Sufism. It expresses with the descending arc, the decrease, through seven stages of the reality of the absolute Unity down to the illusory reality of analytic matter, from which, by ascent through

19. For the peculiar significance of these axes in the Mawlawī ritual, see : James Dickie, «The Mawlawī dervishery in Cairo», in *A.A.R.P.*, XV (1979), pp. 9-15; J. Dickie, « Allah and Eternity : Mosques, Madrasas and Tombs », in *Architecture of the Islamic World*, London, pp. 16-27, 41. Also see the original thought of Dīvāne Mehmed Chelebi, in M. Molé, *op. cit.*, p. 248, and of Ismail Rüsūhī Ankaravī, in M. Molé, *op. cit.*, p. 265.

20. The theories on the meaning of the two areas, eastern and western, belong to Dīvāne Mehmed (XVI cent.) and Rüsūhī Ankaravī, see the translation in M. Molé, *op. cit.*, pp. 249, 268; these owe something to the formative thought in particular of Ibn Sīnā (Avicenna XI cent.). Cf. Seyyed Hossein Nasr, *op. cit.*, p. 267.

21. For the meaning of these two arcs, which are also present in the thought of the Bektashi order, cf. J.K. Birge, *The Bektashi Order of Dervishes*, London 1937, pp. 114-118.

AnIsl 24 (1989), p. 207-232 Giuseppe Fanfoni
An Underlying Geometrical Design of the Mawlawī Samāʿ-Ḫāna in Cairo [avec 3 planches].
© IFAO 2026 AnIsl en ligne https://www.ifao.egnet.net

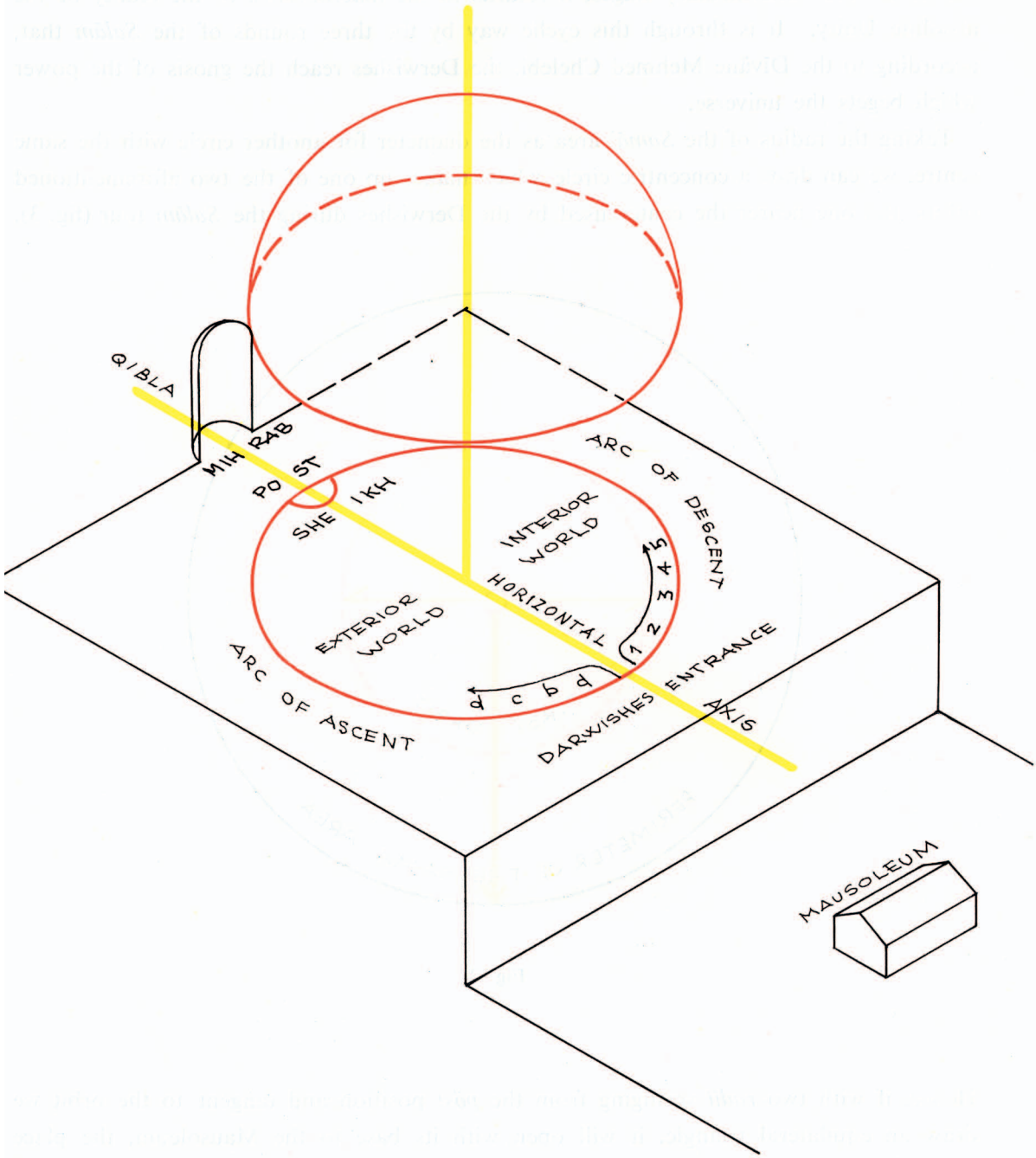


Fig. 2.

AnIsl 24 (1989), p. 207-232 Giuseppe Fanfoni
An Underlying Geometrical Design of the Mawlawī Samā'-Ḥāna in Cairo [avec 3 planches].
© IFAO 2026 AnIsl en ligne https://www.ifao.egnet.net

the other seven intermediary stages, it returns to the macrocosms, or the reality of the absolute Unity. It is through this cyclic way by the three rounds of the *Salām* that, according to the Dīvāne Mehmed Chelebi, the Derwishes reach the gnosis of the power which begets the universe.

Taking the radius of the *Samāʿ* area as the diameter for another circle with the same centre, we can draw a concentric circle which makes up one of the two aforementioned orbits, the one nearer the center used by the Derwishes during the *Salām* tour (fig. 3).

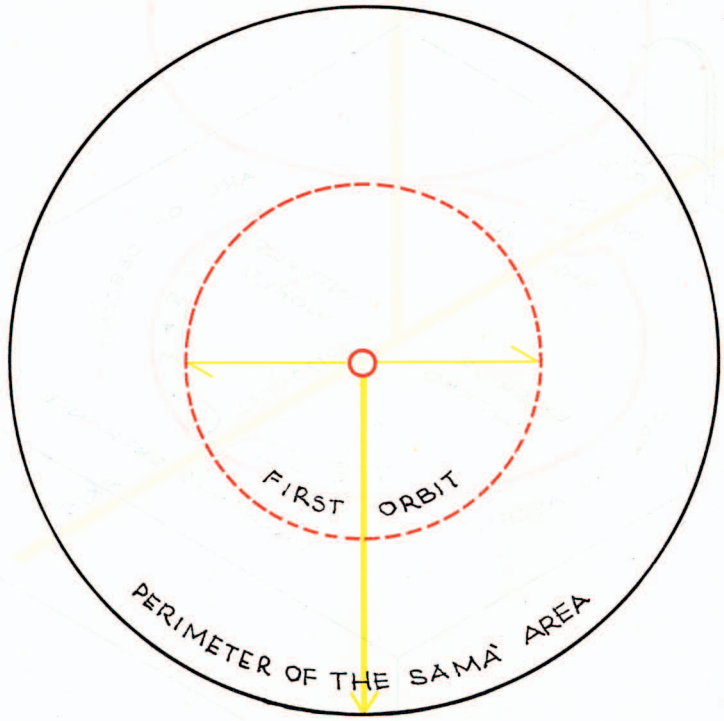


Fig. 3.

Hence, if with two *radii* springing from the *pöst* position and tangent to the orbit we draw an equilateral triangle, it will open with its base to the Mausoleum, the place where the previous *šayḫ* is interred (fig. 4). The *šayḫ* in charge inherited from this previous *šayḫ* the red fleece in virtue of which he sat on the *pöst* with the emblematic authority which had been passed down by *silsila*, step by step, in an initiatic chain which stretched back unbroken to the founder.

AnIsl 24 (1989), p. 207-232 Giuseppe Fanfoni
An Underlying Geometrical Design of the Mawlawī Samāʿ-Ḫāna in Cairo [avec 3 planches].
© IFAO 2026 AnIsl en ligne https://www.ifao.egnet.net

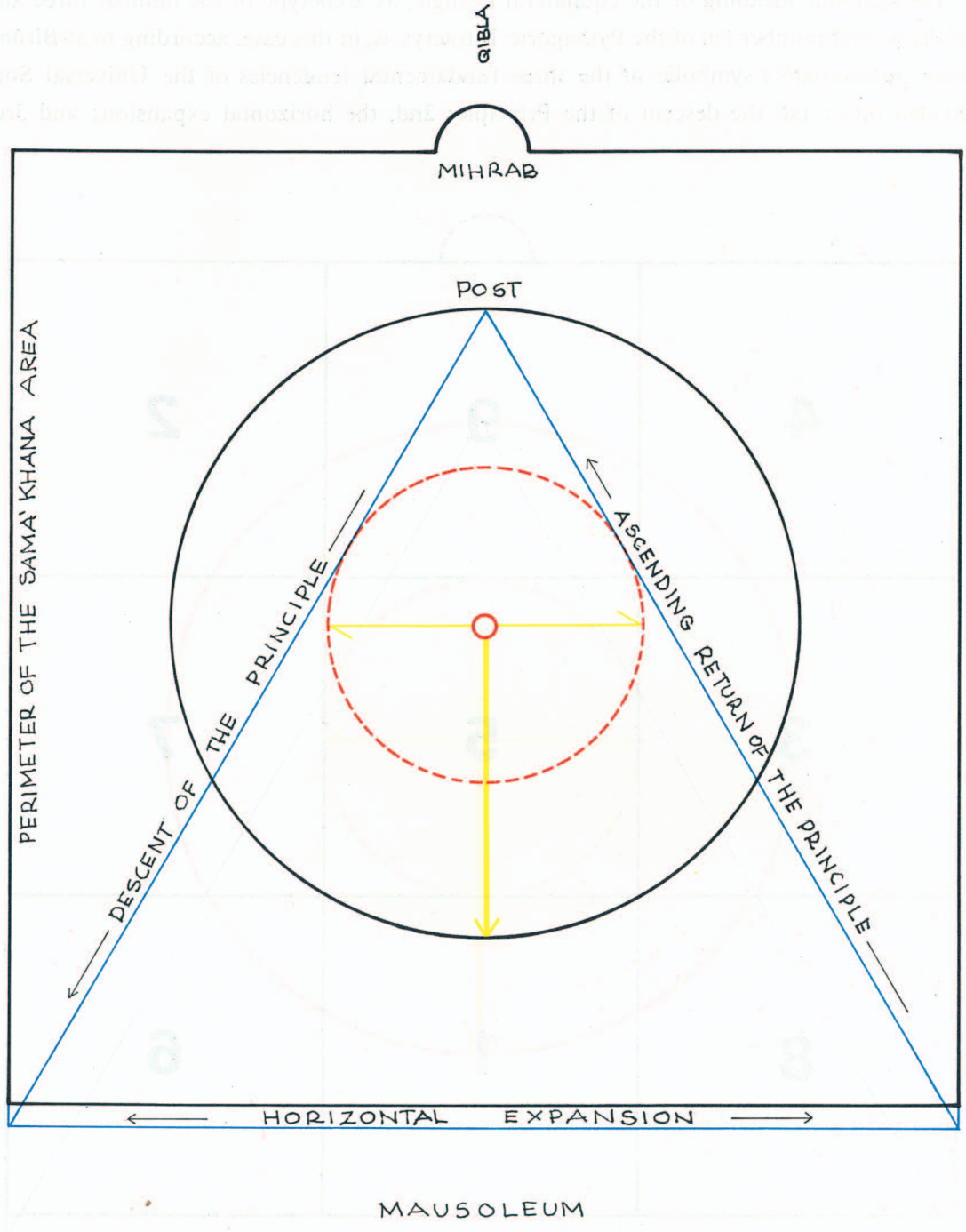


Fig. 4.



AnIsl 24 (1989), p. 207-232 Giuseppe Fanfoni
An Underlying Geometrical Design of the Mawlawī Samāʿ-Ḥāna in Cairo [avec 3 planches].
© IFAO 2026 AnIsl en ligne https://www.ifao.egnet.net

The symbolic meaning of the equilateral triangle, as archetype of the number three and of the perfect number ten of the Pythagoric Tetractys, is, in this case, according to al-Bīrūnī, more appropriately symbolic of the three fundamental tendencies of the Universal Soul divided into : 1st, the descent of the Principle; 2nd, the horizontal expansion; and 3rd,

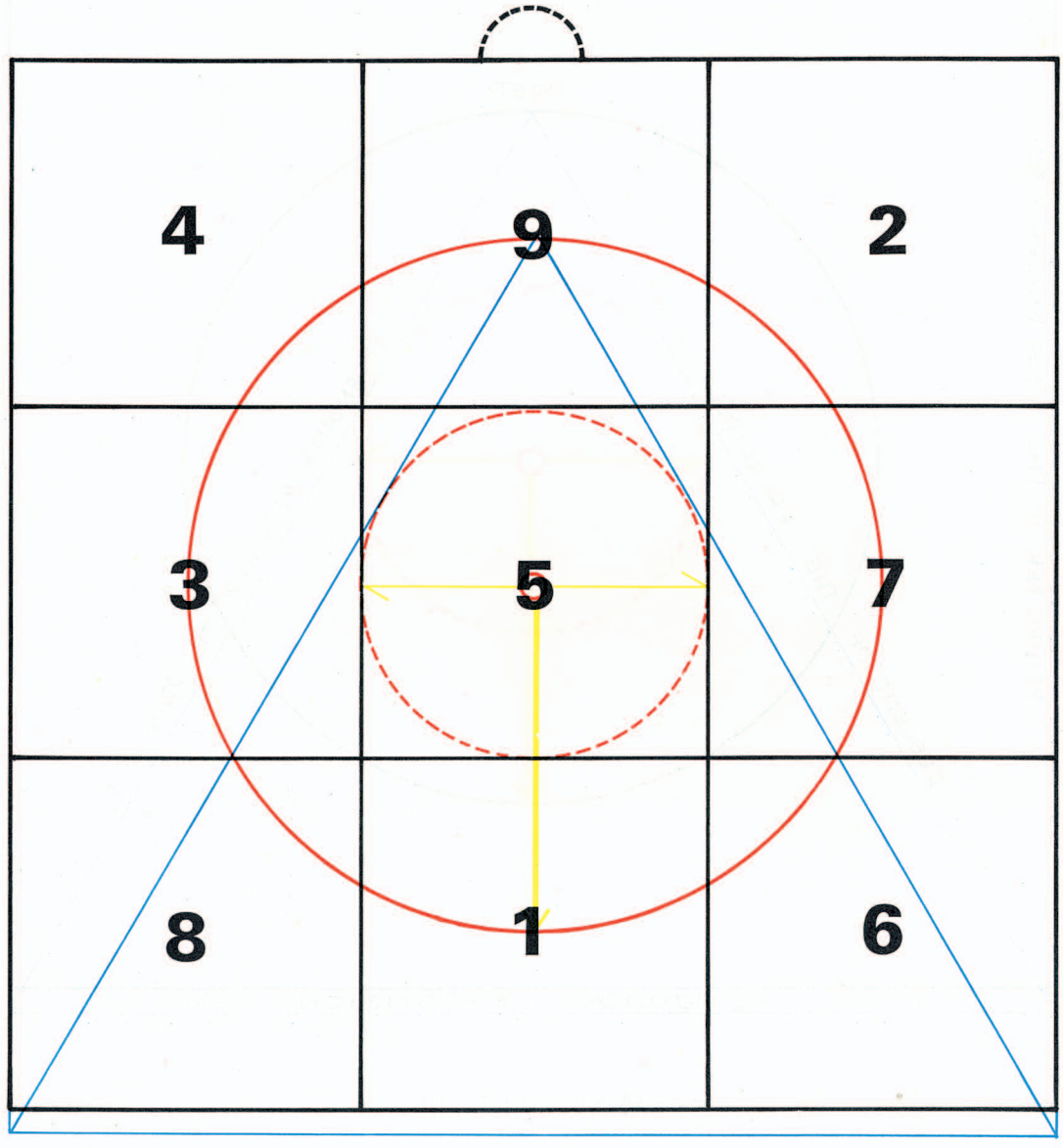


Fig. 5.

AnIsl 24 (1989), p. 207-232 Giuseppe Fanfoni
An Underlying Geometrical Design of the Mawlawī Samāʿ-Ḫāna in Cairo [avec 3 planches].
© IFAO 2026 AnIsl en ligne https://www.ifao.egnet.net

the ascending return to the Principle [22]. This interpretation is most significant for the fact that the top, representing the Principle, is the *pöst* and can be confirmed by the fact that the expansion corresponds to the extension of the side of the base square constituting the plan perimeter of the *Samāʿ-Ḫāna* area. The *Samāʿ-Ḫāna* has a square plan because, according to the ancient Greek and Ṣūfī esotericism, this geometrical shape symbolizes the earth and its qualities. In fact, specifically, the square obtained in this way will be characterized by having sides equal to three times the diameter of the traced orbit. According to this division of the sides, the square may be subdivided into nine compartments, with the central square having inscribed within it the circular orbit, and the whole plan will then correspond to the well-known magic square, an oriental symbol of the intrinsic harmony of number and the cosmic order dominating existent nature [23] (fig. 5).

As the existent universe constitutes, according to Ankarawī, the expansion and the projection of the Unity from the center, in the same way the consciousness expands in a circular way, *via radius,* springing from one center [24], and the science (or technology) evolves, according to Dīvāne Mehmed, along the imaginary circle of the Known (or Wisdom) [25].

This circular and centrifugal motion can be shown by geometrical design. In fact, starting from the intersection of the traced orbit with the horizontal axis of the *Samāʿ-Ḫāna,* with radius equal to that same circle, we trace a series of six circles, each one following the other, according to the intersection which each circle produces on the orbit circle. In this way we see through these six movements (corresponding to the six days of the creation) the first expansion of the center which comes to cover all the sacred area, in that the six circles are tangent to that of the *Samāʿ*. At the same time, joining circuitously all of the points of the second intersection of the six circles together, the second orbit comes into picture, the orbit according to which the Derwishes move on the *Salām* rounds (fig. 6, p. suiv.).

22. Cf. Seyyed Hossein Nasr, *op. cit.,* p. 153.

23. The magic square, which recurs in alchemy and works dealing with symbolism both Arabic and Persian, seems to originate from China, Cf. R. Guenon, *La Grande Triade,* Paris 1946, chap. XVI. Also cf. Keith Critchlow, *op. cit.,* pp. 42-56.

24. Cf. M. Molé, *op. cit.,* p. 265.

25. Cf. M. Molé, *op. cit.,* p. 250.

AnIsl 24 (1989), p. 207-232 Giuseppe Fanfoni
An Underlying Geometrical Design of the Mawlawī Samāʿ-Ḫāna in Cairo [avec 3 planches].
© IFAO 2026 AnIsl en ligne https://www.ifao.egnet.net

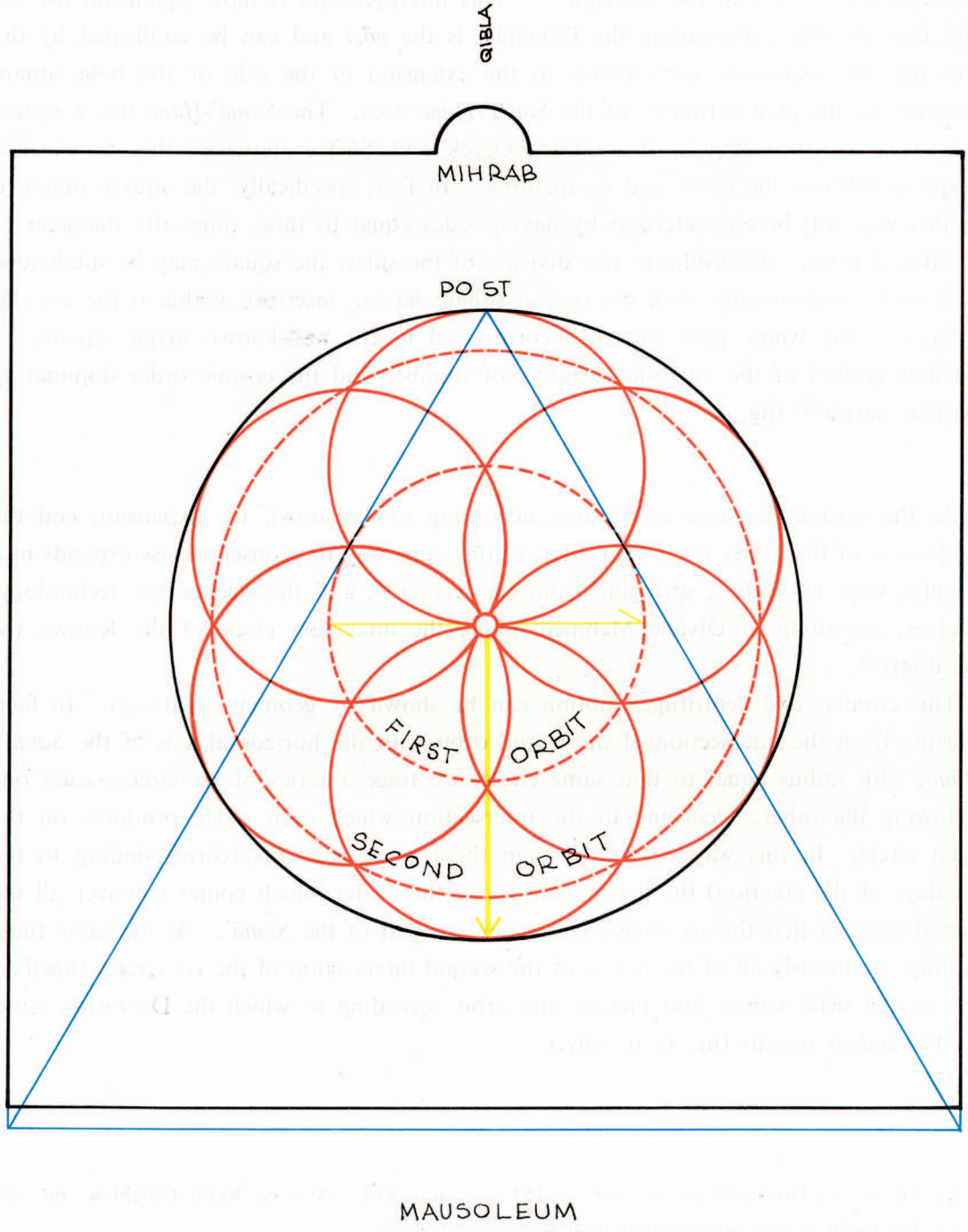


Fig. 6.

AnIsl 24 (1989), p. 207-232 Giuseppe Fanfoni
An Underlying Geometrical Design of the Mawlawī Samā'-Ḫāna in Cairo [avec 3 planches].
© IFAO 2026 AnIsl en ligne https://www.ifao.egnet.net

After pointing each center of the six circles with the radius equal to that of the circle of the *Samāʿ* area, we trace six other circles which will be tangent to the previous six circles and, after having intersected at twelve equidistant points the circumference of the *Samāʿ* area, they will expand over the remainder of the *Samāʿ-Ḥāna* area on the place that is reserved for the spectators. Significantly, this second expansion of the Unity propagates itself over the whole space through and along the line of the first six circles, because every expansion must come from the same center, and, more particularly, this expansion takes place with radius equal to the circle of the *Samāʿ*, because it is through the *Samāʿ* ceremony that the *gnosis* from the center invests the spectator area (fig. 7). Finally, the twelve points obtained on the *Samāʿ* circumference indicate the position of the twelve pillars which are raised to support the dome (fig. 8), where, by way of explanation of the numerical symbolism, the names of the Imāms have been inscribed on circular medallions [26].

Volumetrically, the *Samāʿ-Ḥāna* seems to repeat and to complete the symbolism which we found on the plan. In fact, if we set the graphic of the plan in the vertical position along an axis orthogonal to the previous horizontal axis, and we complete the graphic elements available according to the criterion of orthogonal projections, we will have traced a cube inside of which there is a sphere (globe) the superior extradox of which corresponds to the domed covering of the *Samāʿ-Ḥāna*. And it will be set on a horizontal plane in the middle of the cube, corresponding to the remaining covering (roof) of the edifices (fig. 9).

26. The Mawlawī order never had any special devotion to the 12 Imāms. Nevertheless it must be mentioned that there was a division within the order at an early date into two groups, one of them was more liberal in its way of life and nearer to the order of the Bektashi Dervishes, which was always very attached to the worship of the Imāms. Cf. J.K. Birge, *op. cit.*, pp. 145-148.



AnIsl 24 (1989), p. 207-232 Giuseppe Fanfoni
An Underlying Geometrical Design of the Mawlawī Samāʿ-Ḥāna in Cairo [avec 3 planches].
© IFAO 2026 AnIsl en ligne https://www.ifao.egnet.net

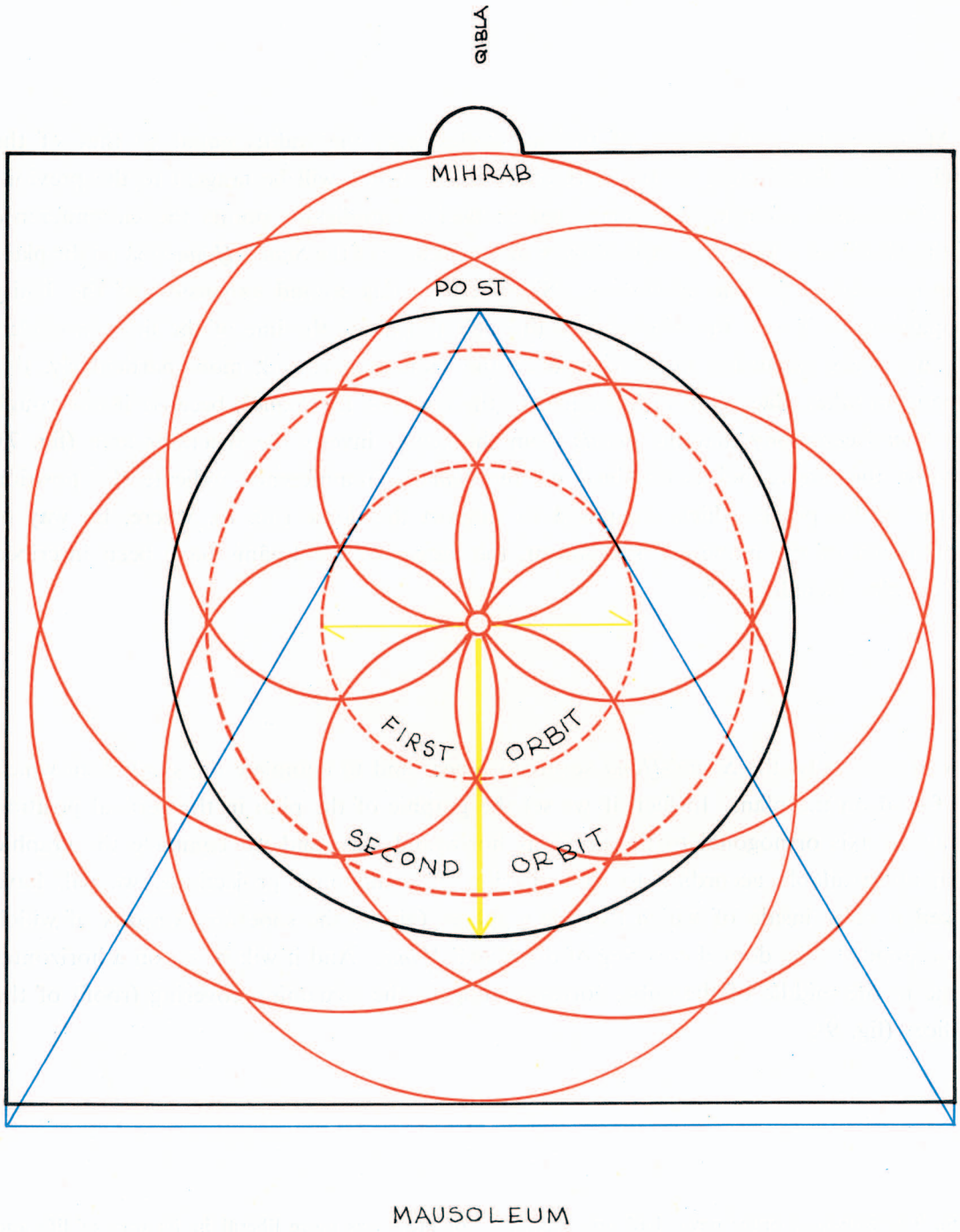


**Fig. 7.**

AnIsl 24 (1989), p. 207-232 Giuseppe Fanfoni
An Underlying Geometrical Design of the Mawlawī Samāʿ-Ḫāna in Cairo [avec 3 planches].
© IFAO 2026 AnIsl en ligne https://www.ifao.egnet.net

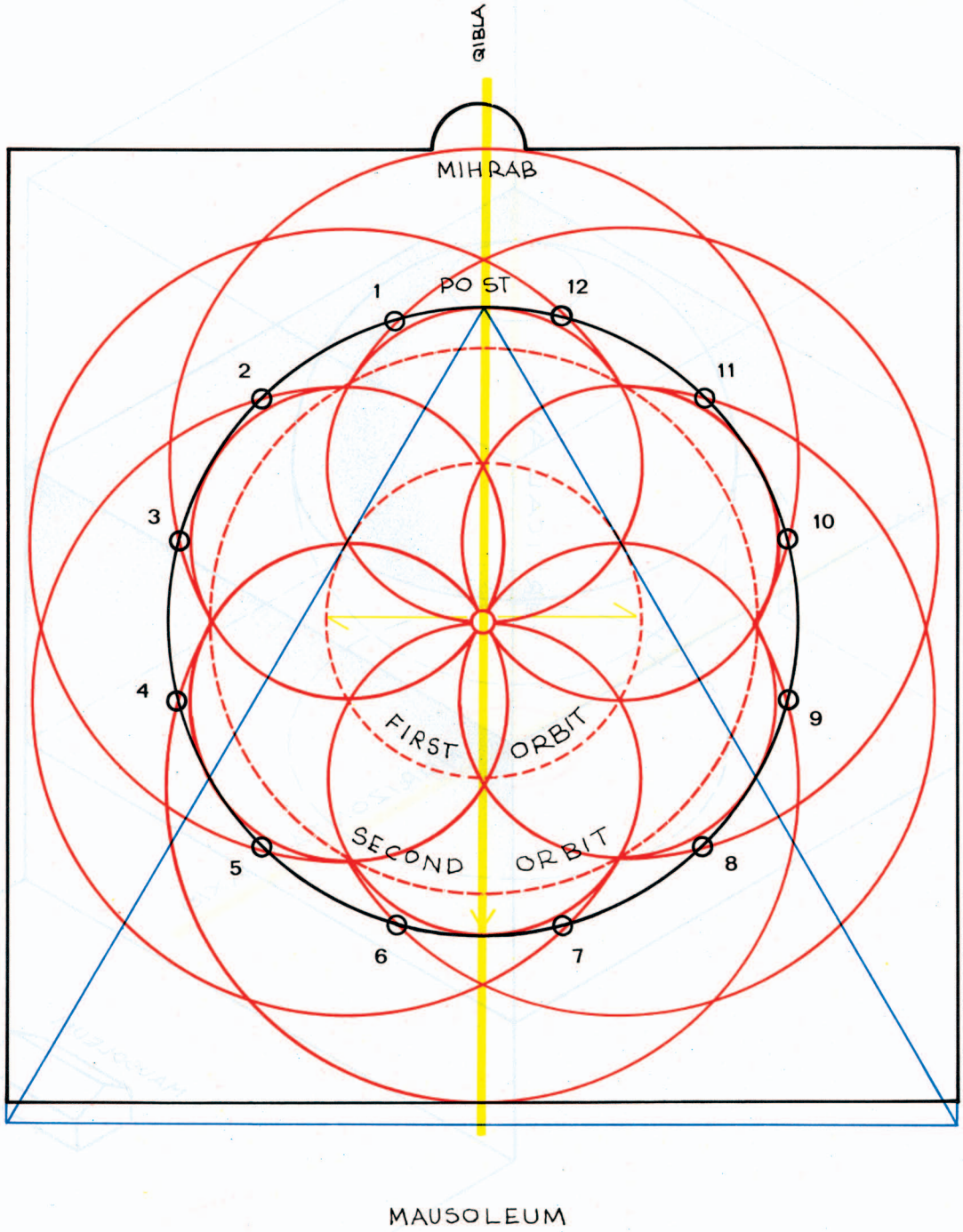


**Fig. 8.**

AnIsl 24 (1989), p. 207-232 Giuseppe Fanfoni
An Underlying Geometrical Design of the Mawlawī Samāʿ-Ḫāna in Cairo [avec 3 planches].
© IFAO 2026 AnIsl en ligne https://www.ifao.egnet.net

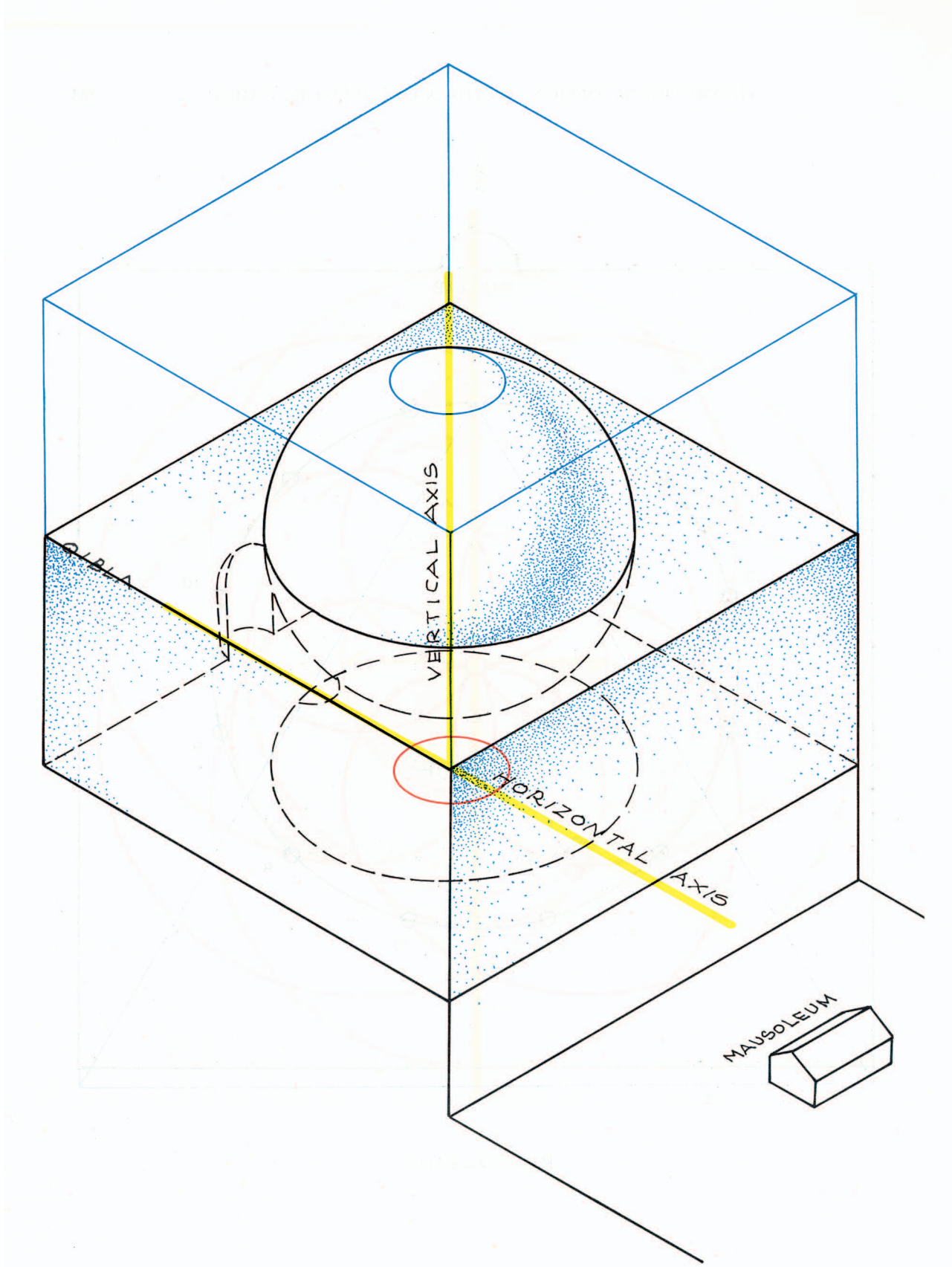


Fig. 9.

AnIsl 24 (1989), p. 207-232 Giuseppe Fanfoni
An Underlying Geometrical Design of the Mawlawī Samāʿ-Ḫāna in Cairo [avec 3 planches].
© IFAO 2026 AnIsl en ligne https://www.ifao.egnet.net

In the interior space of the *Samāʿ-Ḥāna* identified in this way is underlined the second of the two fundamental mystical axes of the *Samāʿ-Ḥāna :* the vertical axis, which has a reference poles, at the summit of the dome, a blue circular ground with gold Quranic inscriptions, while below, on the pavement, there is a circular area of red. Around this axis, on two orbits, the Derwishes whirled with one hand turned upward and the other down, and this vertical axis was underlined by a long chain holding a candlestick, pointing out the Unity in the infinity of the macrocosms, while below it, the *šayḫ,* who at the *finale* of the *Samāʿ* sat in the red area with the Derwishes all around, kept his place. The *šayḫ* symbolized in this position the Tree of Bliss (*Šağarat At-Tūba*), which is the Islamic cosmological tree, the *axis mundi* [27].

The two arcs, descending and ascending, run, in this case, along the perimeter of the dome and they dissolve downward, while the equilateral triangle, in this vertical vision begins from the top of the dome and descends downward where it extends conically on the square of the base and, from thence, ascends again to the center of the emanation (fig. 10, p. suiv.).

The graphic schema, at this point, intertwines in its tridimensional aspect, and the twelve points around the globe may be taken to refer to the zodiac or, in their relation with the cube, archetype of the earth, they represent the twelve months; while on the plan of the dome impost the eight windows mark, with their axes from the centre of the plane dissecting the cube, the eight points of the cube concerning the passive and dynamic aspects of the four fundamental elements of nature : fire, air, water, and earth, and their four intermediate stages (fig. 11, p. suiv.). In the interior space the eighteen vertical elements, composing each of the twelve balustrade sectors around the *Samāʿ* area, remember the number of the novitiate stages, lived by the Derwishes in the eighteen cells of the convent.

27. Cf. M. Molé, *op. cit.*, p. 263.

AnIsl 24 (1989), p. 207-232 Giuseppe Fanfoni
An Underlying Geometrical Design of the Mawlawī Samāʿ-Ḥāna in Cairo [avec 3 planches].
© IFAO 2026 AnIsl en ligne https://www.ifao.egnet.net

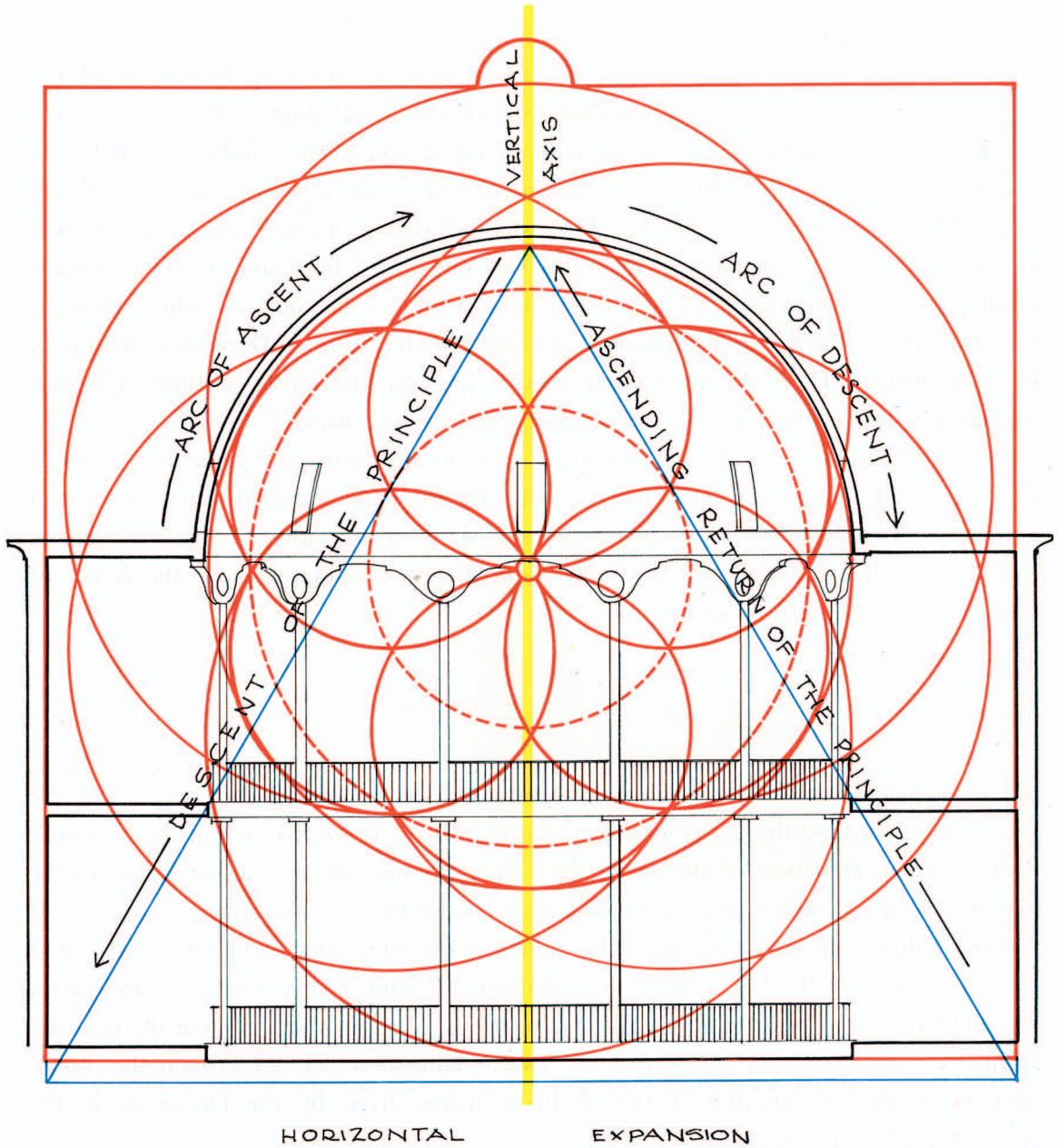


Fig. 10.

AnIsl 24 (1989), p. 207-232 Giuseppe Fanfoni
An Underlying Geometrical Design of the Mawlawī Samāʿ-Ḫāna in Cairo [avec 3 planches].
© IFAO 2026 AnIsl en ligne https://www.ifao.egnet.net

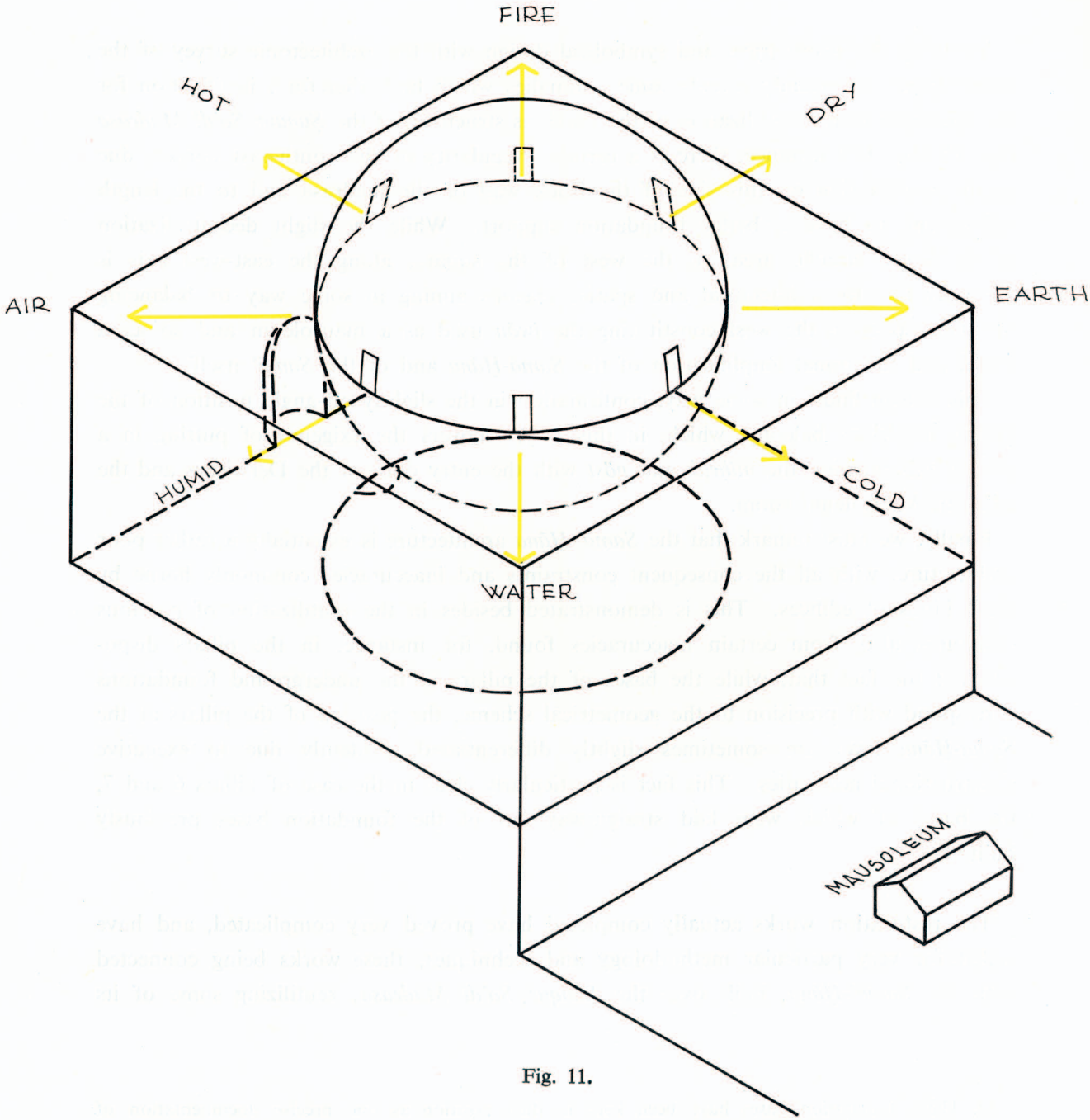


Fig. 11.

AnIsl 24 (1989), p. 207-232 Giuseppe Fanfoni
An Underlying Geometrical Design of the Mawlawī Samāʿ-Ḫāna in Cairo [avec 3 planches].
© IFAO 2026 AnIsl en ligne https://www.ifao.egnet.net

Outwardly, the emerging spherical globe and the cube, with their geometric simplicity are a center and a metaphysical figure referring to the whole area around, like the Kaʿba in Islamic religious geography.

Verifying this geometrical and symbolical design with the architectonic survey of the *Samāʿ-Ḫāna,* it certainly reveals some anomalies which find, therefore, justification for the operation of the reutilization of the previous structures of the *Ṣunqur Saʿdī Madrasa* (fig. 12-13). For instance, there is a certain irregularity of the south-east corner, due to the reutilization on this side of the brick wall of the madrasa and to the length adjustment to have a better foundation support. While the slight decentralization of the *Samāʿ* circular area, to the west of the square, along the east-west axis is evidently due to architectural and spatial reasons aiming in some way to balancing the wide space in the west constituting the *iwān* used as a mausoleum and so as a visual and functional amplification of the *Samā-Ḫāna* and of the *Samāʿ* itself.

This reason finds, in some way, confirmation in the slightly off-angle position of the jutting musicians balcony, which, in this way, recovers the exigency of putting in a proper axis position the *miḥrāb* and *pöst* with the entry door of the Derwishes and the adjacent Mausoleum room.

Finally, we must remark that the *Samāʿ-Ḫāna* architecture is essentially a rather poor architecture, with all the consequent constraints and inaccuracies commonly borne by these kinds of edifices. This is demonstrated besides in the reutilization of previous structures, also, from certain inaccuracies found, for instance, in the pillars dispositions : the fact that, while the bases of the pillars in the underground foundations correspond with precision to the geometrical scheme, the position of the pillars at the *Samā-Ḫāna* level are sometimes slightly differentiated, evidently due to executive constructional necessities. This fact is particularly clear in the case of pillars 6 and 7, the bases of which were laid straightway out of the foundation bases previously built [28].

The restoration works actually completed have proved very complicated, and have called for very particular methodology and techniques, these works being connected with the *Samāʿ-Ḫāna,* built over the *Ṣunqur Saʿdī Madrasa,* reutilizing some of its

28. These foundation bases have been kept in their position as one precise documentation of the particular constructive problems of the edifice.

AnIsl 24 (1989), p. 207-232 Giuseppe Fanfoni
An Underlying Geometrical Design of the Mawlawī Samāʿ-Ḫāna in Cairo [avec 3 planches].
© IFAO 2026 AnIsl en ligne https://www.ifao.egnet.net

architectural remains. The works, nevertheless, meticulously carried out, have allowed the archeological recovery of the Madrasa [29].

With the successful restoration of the Cairo *Samāʿ-Ḫāna,* will be fortunately maintained one of the most significant monuments of Mawlawī symbology and Ṣūfī thought.

The general layout of the entire architectonic complex reproduces planimetrically that of Konia with a group of buildings that make up the sacred area, around which are arranged the cells with a cloister garden. However, unlike Konia, where the *Samāʿ-Ḫāna* is absorbed into an articulated spatial and volumetric unity comprising the mausoleum and mosque, the Cairo *Samāʿ-Ḫāna* is the dominant element, which according to Konia, preserves a spatial continuity, indeed quite spectacular, with the mausoleum.

After Konia (XVI cent.) we find a greater attention being paid to the symbology of the rite and its functions in Galata, Yeni Kapi, Bursa and in many other cases in which, as happens for the most part in graphic representations of the ceremonial hall, the *Samāʿ-Ḫāna* is exalted as an independent space, and recovers the tendency to the central plan which we find in the antecedent Manisa *Samāʿ-Ḫāna* (XIV cent.) [30].

However the proportional definition of the architectonic space together with the philosophical speculation of the order, belongs to the last phase of its history, like the *Samāʿ-Ḫāna* of Kutaya; this latter has a plan with the same dimensions as the contemporary building at Cairo and a space created by the same geometrical design, but with some irregularity due to the building position with respect to the *qibla* and so not having an axial position between the *miḥrāb* and mausoleum (Pl. III).

Certainly, the special conditions which have allowed the realisation of the Cairo *Samāʿ-Ḫāna* must be referred to the opening that Islamic architecture had during the XIXth century to western civilization. In this specific case, it allowed the finding of the architectonic language most near to the Ṣūfī ideology.

In the Cairo *Samāʿ-Ḫāna,* the Baroque-Ottoman style recovers the *leit-motiv* of the curved line in every defined shape, matching, as in a musical *sottofondo,* the circle-mysticism at the base of the *Samāʿ* ceremony. To take some examples : the arches and counterarches underneath the dome impost which refer in some way to the ascending and the descending mystical arcs, the circular medallions with the inscribed names of the Imāms, the numerous elliptical windows, the curve of the jutting musician's balcony which projects itself into the cosmic space where the *Samāʿ* performance was held, as well as the second floor balcony which runs all round at middle height, where the

29. Cf. G. Fanfoni, *Il restauro del Samaʿ Khana dei dervisci mevlevi,* Cairo 1988.

30. Cf. G. Goodwin, *A History of Ottoman Architecture,* London 1971; fig. 36.

AnIsl 24 (1989), p. 207-232 Giuseppe Fanfoni
An Underlying Geometrical Design of the Mawlawī Samāʿ-Ḫāna in Cairo [avec 3 planches].
© IFAO 2026 AnIsl en ligne https://www.ifao.egnet.net

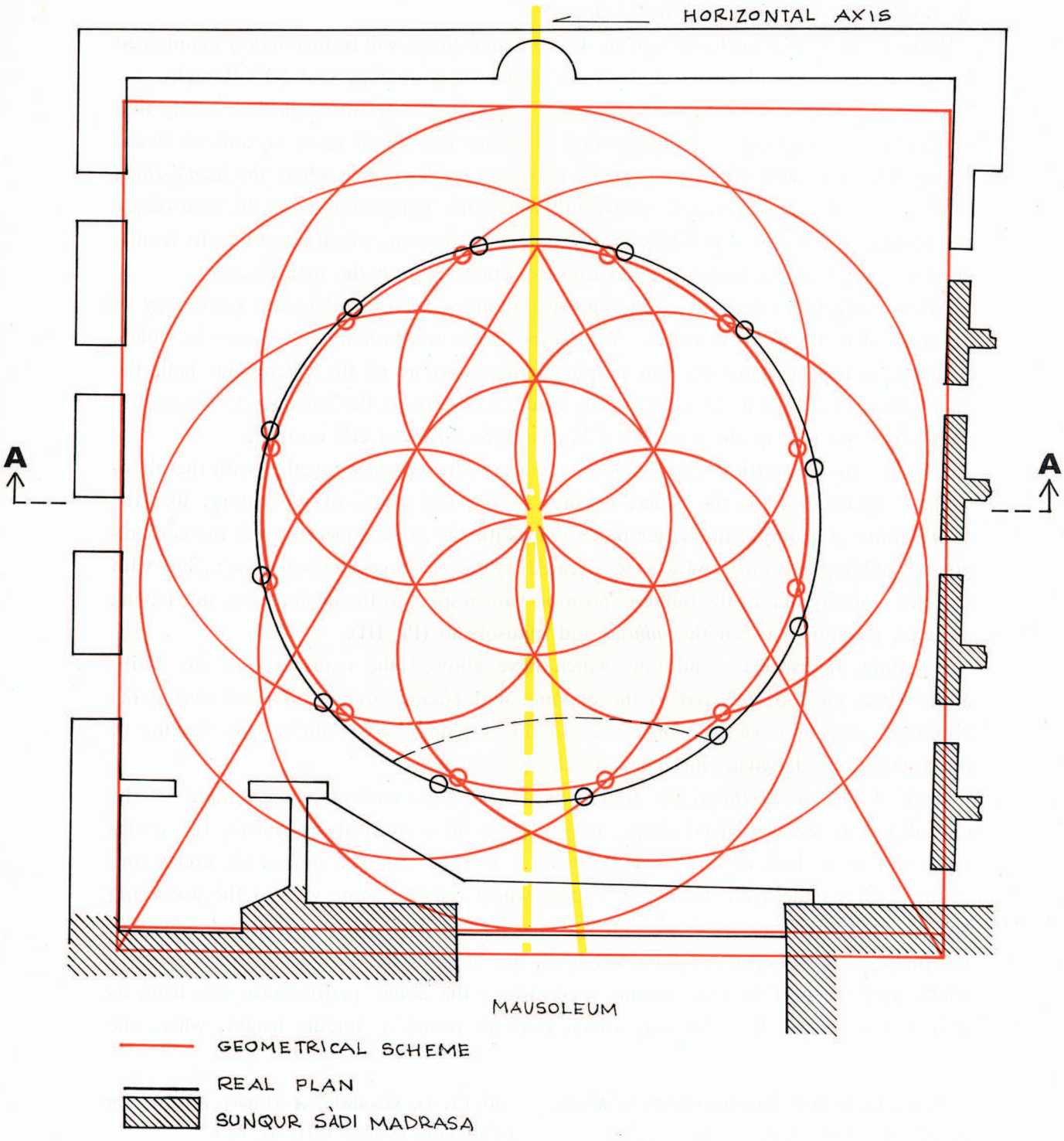


Fig. 12.

AnIsl 24 (1989), p. 207-232 Giuseppe Fanfoni
An Underlying Geometrical Design of the Mawlawī Samā'-Ḫāna in Cairo [avec 3 planches].
© IFAO 2026 AnIsl en ligne https://www.ifao.egnet.net

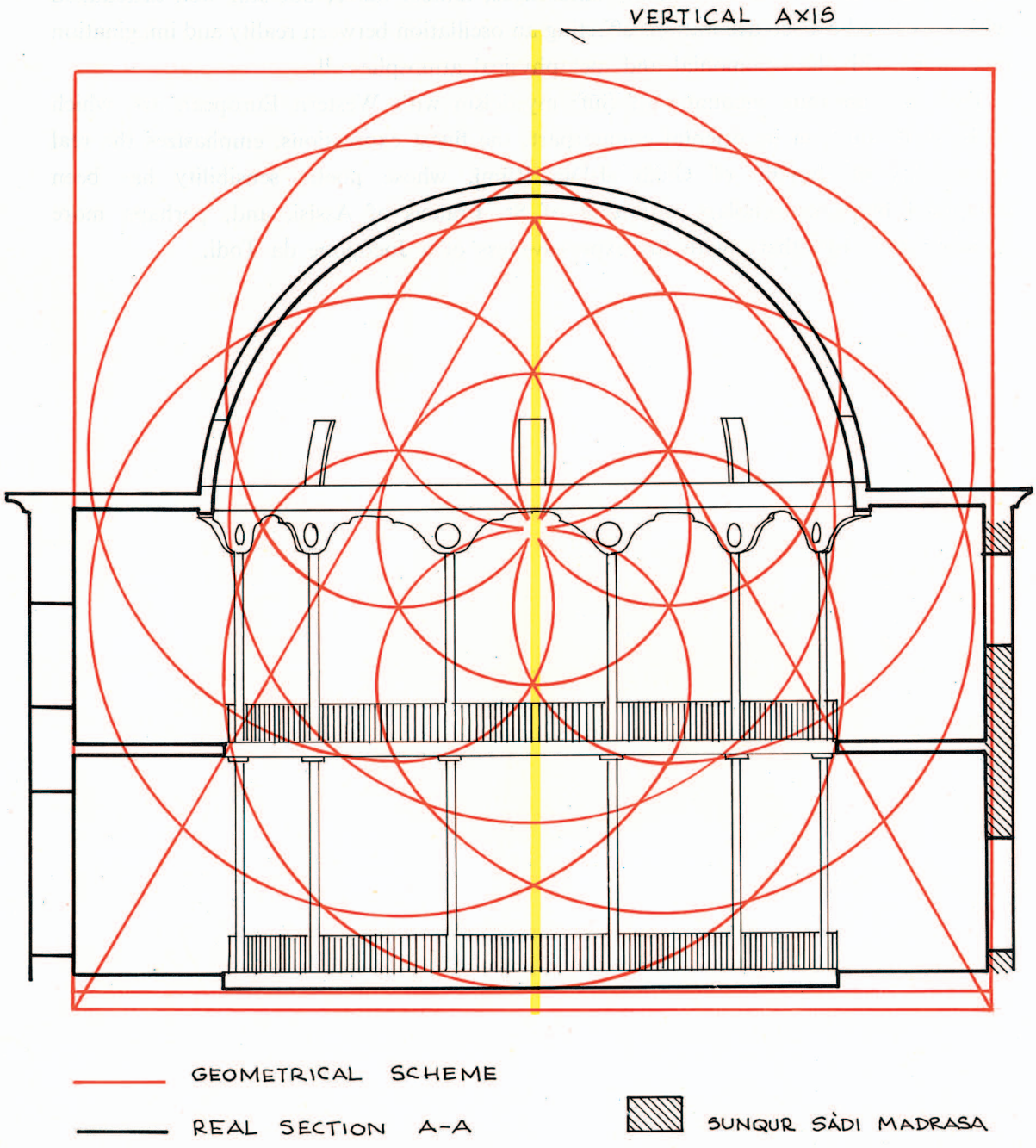


Fig. 13.

AnIsl 24 (1989), p. 207-232 Giuseppe Fanfoni
An Underlying Geometrical Design of the Mawlawī Samāʿ-Ḫāna in Cairo [avec 3 planches].
© IFAO 2026 AnIsl en ligne https://www.ifao.egnet.net

important personages of Cairo society visually participated in the ceremony rite, and, finally, the pictorial decorations which crown the dome with its meaning of heavenly vault.

This latter is painted with simple landscapes, almost naive, but still well articulated with interposed rococo decorations effecting an oscillation between reality and imagination consonant with the ceremonial and metaphysical atmosphere [31].

This spontaneaous encounter of Ṣūfī mysticism with Western European art, which finds, in its turn, in its oriental counterpart, the finest expressions, emphasizes the real universality of thought of Ğalāl al-Dīn Rūmī, whose poetic sensibility has been compared by some scholars with that of St. Francis of Assisi, and, perhaps more appropriately, by others, with the expressiveness of a Jocopone da Todi.

31. For the state of preservation of the paintings see : G. Fanfoni - C. Burri, *Notes on the Restoration, op. cit.*, pp. 75-76. G. Fanfoni - C. Burri, *The Mawlawiyya ..., op. cit.*, pp. 62-65.

AnIsl 24 (1989), p. 207-232 Giuseppe Fanfoni
An Underlying Geometrical Design of the Mawlawī Samā'-Ḫāna in Cairo [avec 3 planches].
© IFAO 2026 AnIsl en ligne https://www.ifao.egnet.net

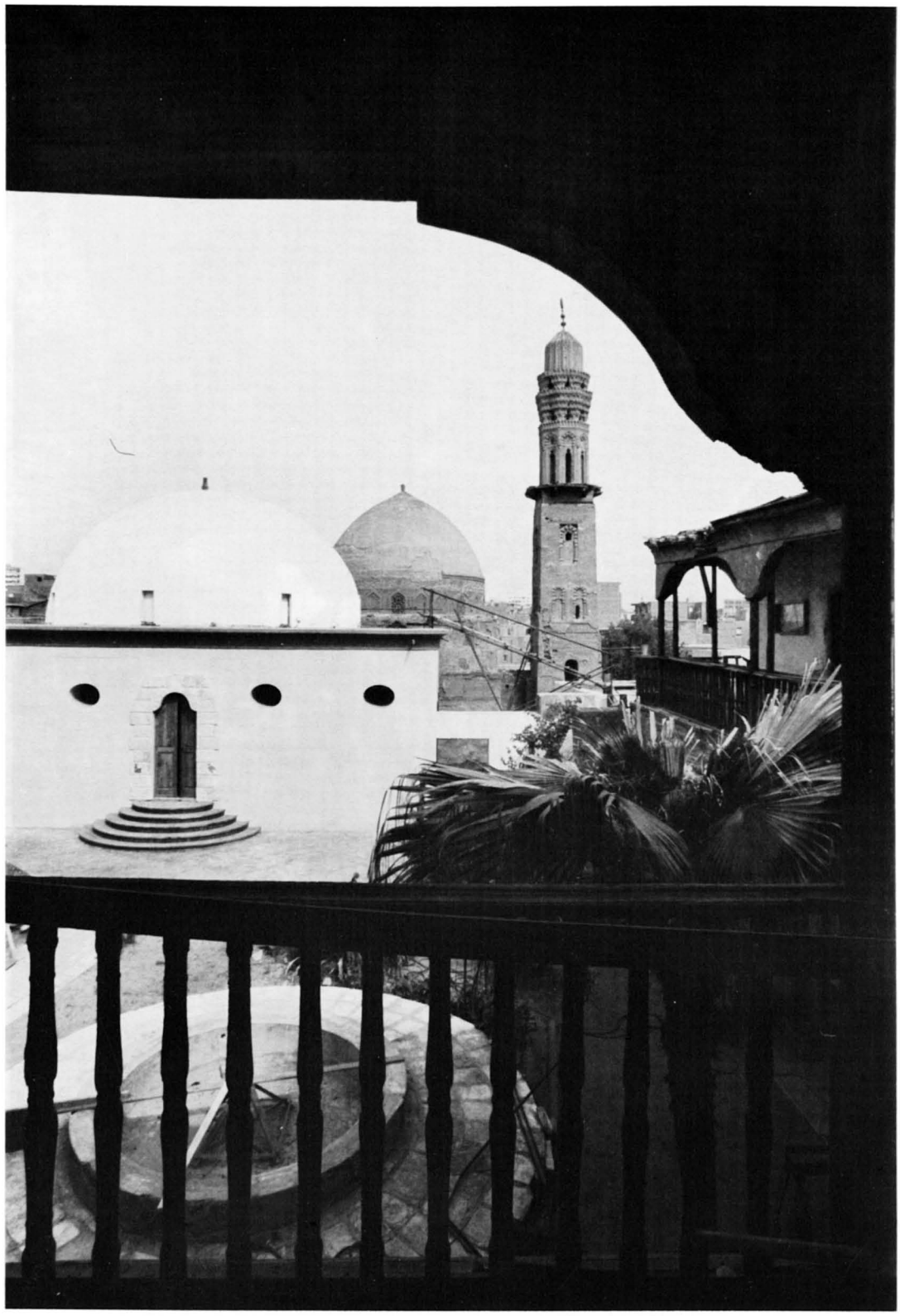

Exterior of the *Samāʿ-Ḫāna* in Cairo.

AnIsl 24 (1989), p. 207-232 Giuseppe Fanfoni
An Underlying Geometrical Design of the Mawlawī Samāʿ-Ḫāna in Cairo [avec 3 planches].
© IFAO 2026 AnIsl en ligne https://www.ifao.egnet.net

PLANCHE X

Interior of the *Samāʿ-Ḫāna* in Cairo.

AnIsl 24 (1989), p. 207-232 Giuseppe Fanfoni
An Underlying Geometrical Design of the Mawlawī Samāʿ-Ḫāna in Cairo [avec 3 planches].
© IFAO 2026 AnIsl en ligne https://www.ifao.egnet.net

Interior of the *Samāʿ-Ḫāna* in Kutaya (Turkey).

AnIsl 24 (1989), p. 207-232 Giuseppe Fanfoni
An Underlying Geometrical Design of the Mawlawī Samāʿ-Ḫāna in Cairo [avec 3 planches].
© IFAO 2026 AnIsl en ligne https://www.ifao.egnet.net